TYPE	OUTPUT		POLE	TIME RATING	VOLTAGE V	Hz	SYN.SPEED R.P.M
	HP.	kW.					
AEHHXU	125	93	2	CONT.	230/460	60	3600

TOTALLY ENCLOSED FAN-COOLED TYPE, SQUIRREL-CAGE ROTOR

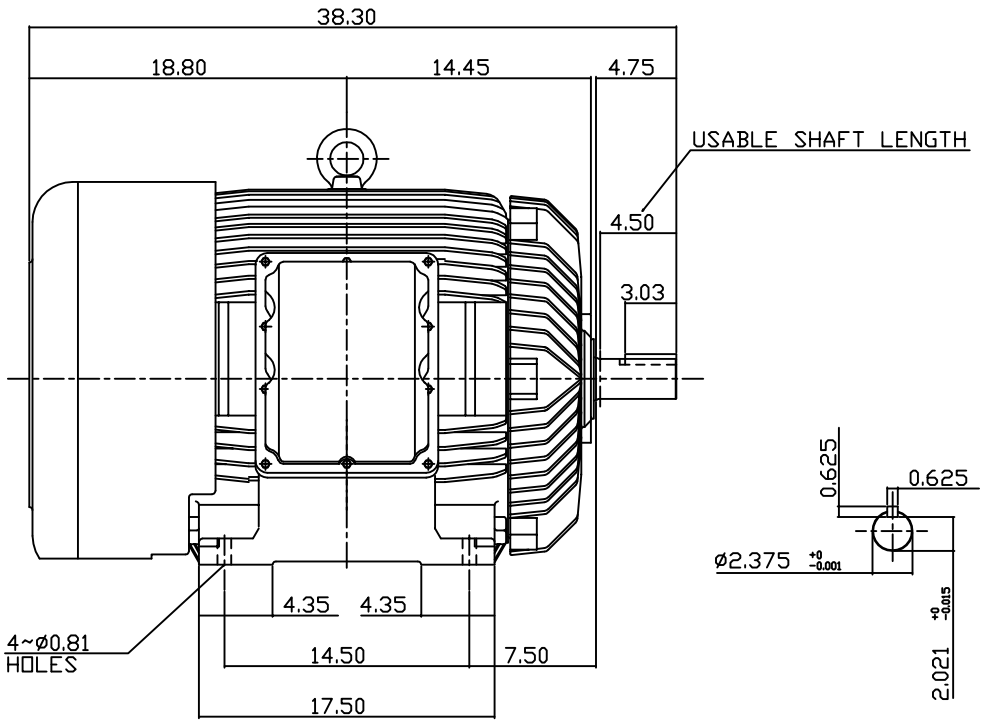

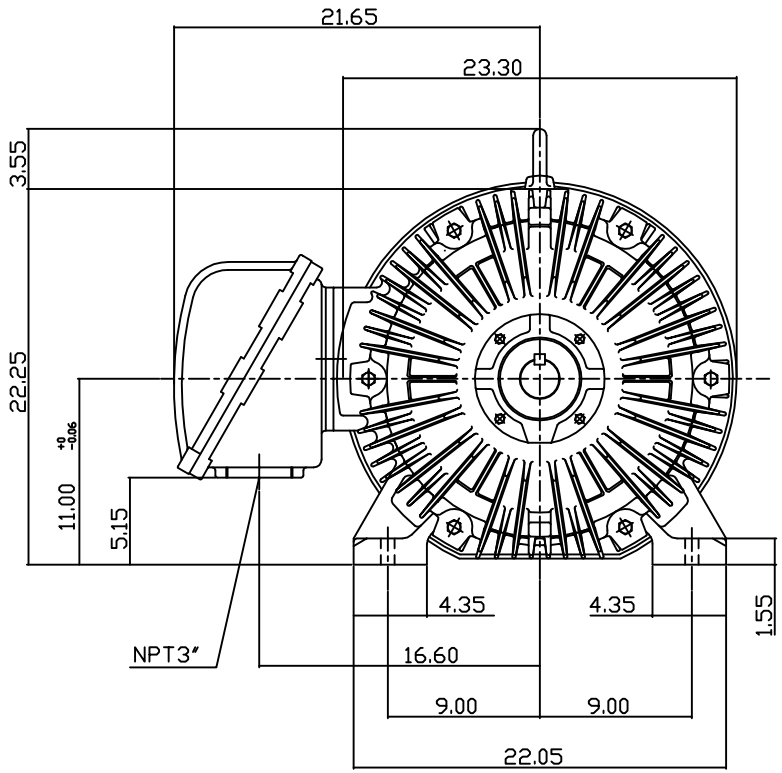

NOTE:

1. DIMENSIONS IN INCH.
2. FRAME NO. 444TS
3. F CLASS INSULATION, S.F.1.15
4. UL EXPLOSION PROOF
5. SUITABLE FOR DIVISION I, CLASS I, GROUP D, CLASS II, GROUP E,F,G.
6. BEARING SIZE: DRIVE END: 6313C3
   NON-DRIVE END: 6313C3
7. MOTOR APPROX. WEIGHT: 1560 LBS

TX-56

DWN.	W.L.LIN	APR·07·2003
CHKD.	W.L.LIN	APR·07·2003
APPD.	C.WANG	APR·07·2003

DATE MAY 2, 2011

CATALOG NO. XP1252

OUTLINE DIMENSIONS

3-PHASE INDUCTION MOTOR

TECO Westinghouse

DWG NO. 3A040T3260

REV: 00

Downloaded from Dealers Industrial Equipment -- Visit https://DealersElectric.com or call (908) 688-1966 for all of your Teco needs!