DATE	OUTLINE DIMENSIONS	MOTOR TYPE:
MAY 18, 2011	3-PHASE INDUCTION MOTOR	AEHHXU
CATALOG NO. XP0106		FRAME NO. 256T

Pole	HP	KW	Hz	VOLT	Syn. Speed RPM
6	10	7.5	60	230/460	1200

Ins	Rating	Dimension in	Approx Weight	Bearings	
F	CONT.	inches	376 lbs.	DE: 6309ZZ	NDE: 6307ZZ

Totally Enclosed Fan-Cooled Type, Squirrel-Cage Rotor.

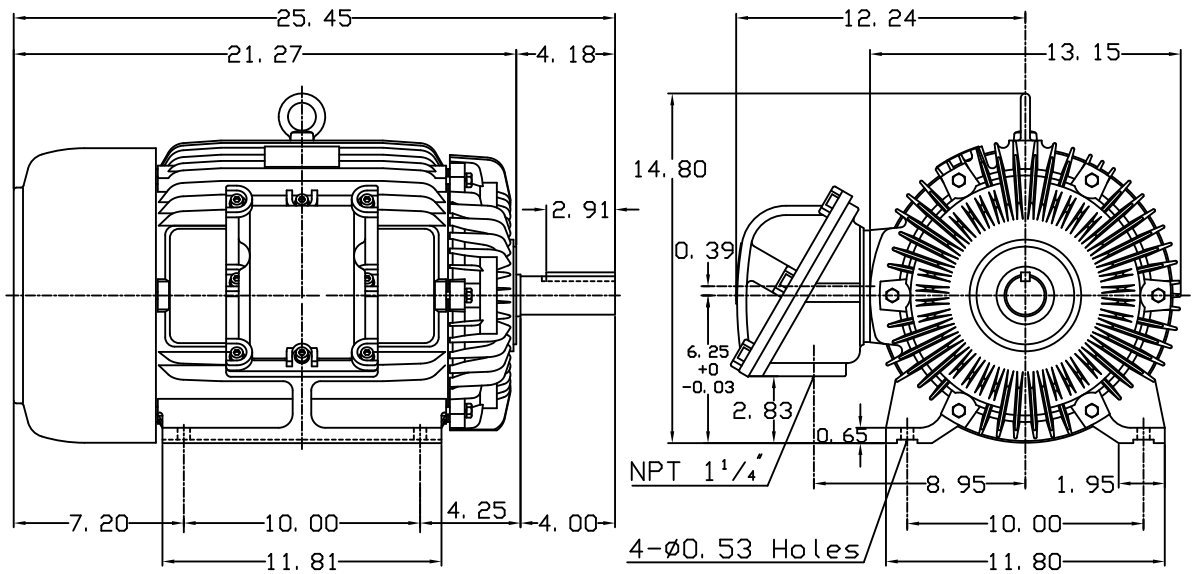

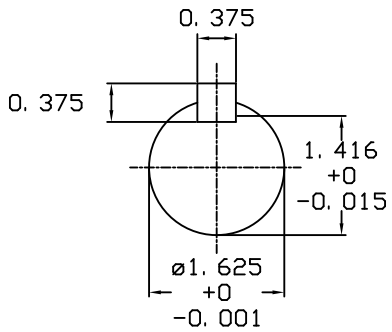

NOTE:

1. EXPLOSION PROOF:
   CLASS I GROUP C, D AND
   CLASS II GROUP E, F, G.

DWN.	J. H. LIANG	12-04-98	TECO Westinghouse
CHKD.	C. S. LO	12-10-98	DWG NO. 31049M626140
APPD.	Y. B. HUANG	12-10-98	

Downloaded from Dealers Industrial Equipment -- Visit https://DealersElectric.com or call (908) 688-1966 for all of your Teco needs!

TECO Westinghouse

ISSUED		ENCLOSURE
April 6, 2011	**PERFORMANCE DATA**	EXPLOSION PROOF
TYPE	**3-PHASE INDUCTION MOTOR**	CATALOG#
AEHHXU		XP0106

NAMEPLATE INFORMATION

OUTPUT HP	OUTPUT KW	POLE	FRAME SIZE	VOLTAGE	HZ	RATED AMBIENT	INS. CLASS	NEMA DESIGN	TIME RATING	SERVICE FACTOR
10	7.5	6	256T	230/460	60	40°C	F	B	CONT.	1.15

TYPICAL PERFORMANCE

FULL LOAD RPM	EFFICIENCY				POWER FACTOR			MAXIMUM POWER FACTOR CORRECTION
	FULL LOAD		3/4 LOAD	1/2 LOAD	F. L.	3/4 LOAD	1/2 LOAD	
	MIN. %	NOM. %	%	%	%	%	%	
1175	89.5	91	92	91	81.5	76.5	65	4.4 KVAR

CURRENTS									NEMA KVA CODE LETTER
NO LOAD			FULL LOAD			LOCKED ROTOR			
AT 208 VOLT	AT 230 VOLT	AT 460 VOLT	AT 208 VOLT	AT 230 VOLT	AT 460 VOLT	AT 208 VOLT	AT 230 VOLT	AT 460 VOLT	
12.27	11.10	5.55	27.87	25.20	12.60	179.13	162.00	81.00	H

TORQUE				INERTIA			ACCEL TIME	
FULL LOAD lb-ft	LOCKED ROTOR %FLT	PULL UP %FLT	BREAK DOWN %FLT	ROTOR WR^2 $lb\text{-}ft^2$	NEMA LOAD WK^2 $lb\text{-}ft^2$	MAX ALLOWABLE WK^2 $lb\text{-}ft^2$	NEMA LOAD WK^2 Sec	MAX ALLOWABLE WK^2 Sec
44.68	260	210	280	2.872	137	333.69	4.91	11.81

SAFE STALL TIME IN SECONDS		ALLOWABLE STARTS PER HOUR		SOUND PRESSURE LEVEL @ 3 FT dB(A)
COLD	HOT	COLD	HOT	
26	18	2	1	57

APPROVED:	M. PRATER	DRAWING NO.	31057XP0106	REVISION 0

Downloaded from Dealers Industrial Equipment -- Visit https://DealersElectric.com or call (908) 688-1966 for all of your Teco needs!

DATE: **May 14, 2011**	**CONNECTION DIAGRAM**	CATALOG NO.: **XP0106**

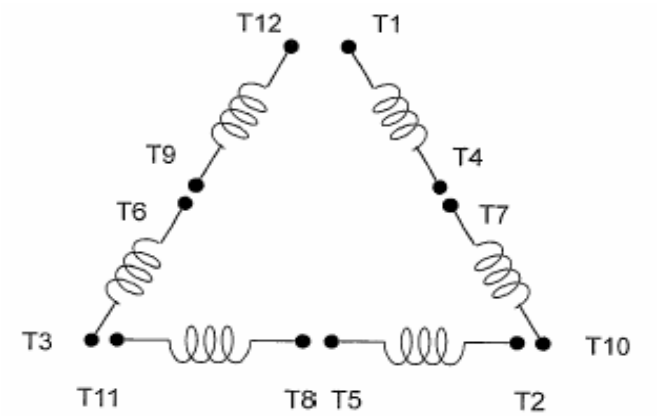

SCHEMATIC - Δ / Y CONNECTION

ACROSS THE LINE CONNECTION

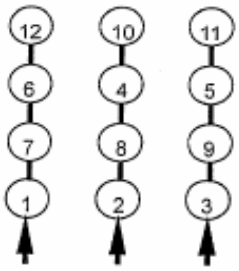	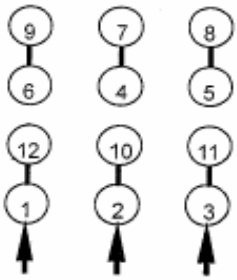
LINE **230 VOLT CONNECTION**	**LINE** **460 VOLT CONNECTION**

***CONTACT TWMC IF YOU HAVE ANY QUESTIONS REGARDING THE MOTOR CONNECTION.**
PH: 1-800-873-8326

TECO Westinghouse	DWG NO. **DAC-1565-5**

Downloaded from Dealers Industrial Equipment -- Visit https://DealersElectric.com or call (908) 688-1966 for all of your Teco needs!

Downloaded from Dealers Industrial Equipment -- Visit https://DealersElectric.com or call (908) 688-1966 for all of your Teco needs!

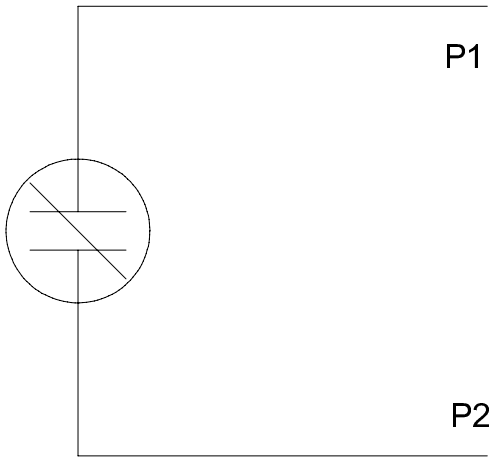

NORMALLY CLOSED
OPENS ON RISING TEMP

STATOR WINDING THERMOSTATS SCHEMATIC DIAGRAM

REV DATA							
				DFTM D. BRYAN	061581	S.O. 1625AA	REV
				APPD G. GODWIN	070881	D SPEC 110A75	02
		APPD J. BROWN	071481	APPD CULBERTSON	070881	DIMENSIONS IN INCHES - NTS	
	AMT; DEM; 04/30/99	APPD	_____	APPD D.F. KOSAR	071381	8629A28	

TECO-WESTINGHOUSE MOTOR COMPANY ROUND ROCK, TX USA

INSTALLATION AND MAINTENANCE INSTRUCTIONS FOR THREE PHASE INDUCTION MOTORS

Frames 143T - 449TZ

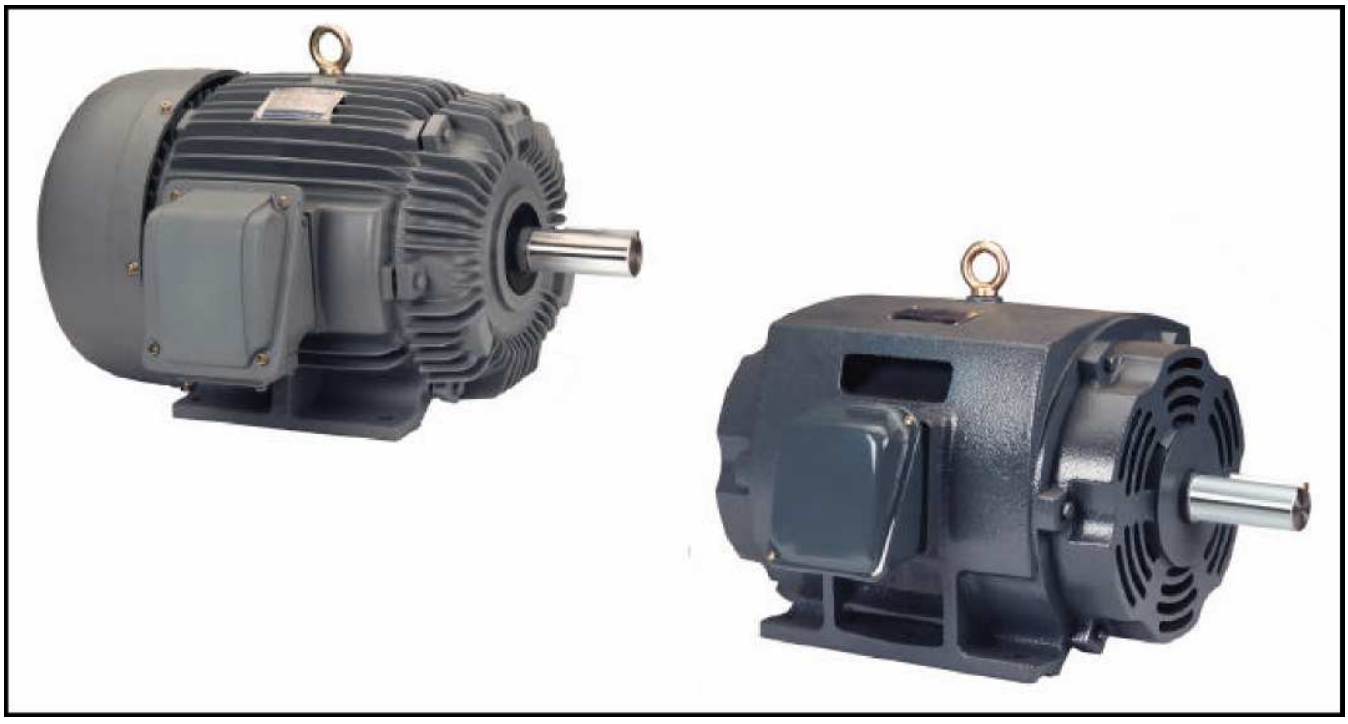

5100 North IH 35 Round Rock, Texas 78681

Downloaded from Dealers Industrial Equipment -- Visit https://DealersElectric.com or call (908) 688-1966 for all of your Teco needs

RECEIVING

1. Check nameplate data.
2. Check whether any damage has occurred during transportation.
3. After removal of shaft clamp, turn shaft by hand to check that it turns freely.
4. If motor is to be reshipped (alone or installed to another piece of equipment) the shaft must again be clamped to prevent axial movement.
   Note: Remove the bearing clamp before turning the shaft on 284T-449TZ frame motors.

WARNING
THE FOLLOWING SAFETY PRECAUTIONS MUST BE OBSERVED:

1. Electric rotating machinery and high voltage can cause serious or fatal injury if improperly installed, operated or maintained. Responsible personnel should be familiarized with NEMA MG-1; Safety Standards for Construction and Guide Selection. Installation and Use of Electric Motors and Generators; National Electric Code and all local safety requirements.
2. When servicing, all power sources to the motor and to the accessory devices should be de-energized and disconnected and all rotating parts should be at standstill.
3. Lifting means, when supplied, are intended for lifting the motor only. When two lifting devices are supplied with the motor a dual chain must be used.
4. Suitable protection must be used when working near machinery with high noise levels.
5. Safeguard or protective devices must not be by-passed or rendered inoperative.
6. The frame of this machine must be grounded in accordance with the National Electric Code and applicable local codes.
7. A suitable enclosure should be provided to prevent access to the motor by other than authorized personnel. Extra caution should be observed around motors that are automatically or have automatic re-setting relays as they may restart unexpectedly.
8. Shaft key must be fully captive or removed before motor is started.
9. Provide proper safeguards for personnel against possible failure of motor-mounted brake, particularly on applications involving overhauling loads.
10. Explosion proof motors are constructed to comply with the label service procedure manual, repair of these motors must be made by TECO-Westinghouse Motor Company or U/L listed service center in order to maintain U/L listing.

LOCATION

1. Drip-proof motors are intended for use where atmosphere is relatively clean, dry, well ventilated and non-corrosive.
2. Totally enclosed motors may be installed where dirt, moisture, or dust are present and in outdoor locations.
3. Explosion-proof motors are built for use in hazardous locations as indicated by Underwriters' label on the motor.
4. Chemical duty enclosed motors are designed for installation in high corrosion or excessive moisture locations.

   Note: in all cases, no surrounding structure should obstruct normal flow or ventilating air through or over the motor.

Downloaded from Dealers Industrial Equipment -- Visit https://DealersElectric.com or call (908) 688-1966 for all of your Teco needs

MOUNTING

1. Mount motor securely on a firm, flat base. All ball bearing normal thrust motors up to and including 256T frame size may be side-wall or ceiling mounted; all others check nearest TECO-Westinghouse office for mounting recommendations.
2. Align motor accurately, using a flexible coupling if possible. For drive recommendations, consult with drive or equipment manufacturer, or TECO-Westinghouse.
3. Mounting bolts must be carefully tightened to prevent changes in alignment and possible damage to the equipment. The recommended tightening torque's for medium carbon steel bolts, identified by three radial lines at 120 degrees on the head, are:

Bolt Size	Recommended Torque (Ft-lb.)	
	Minimum	Maximum
2/8	25	37
1/2	60	90
5/8	120	180
3/4	210	320

4. V-belts Sheave Pitch Diameters should not be less than those shown in Table 1 (NEMA recommended values)
5. Tighten belts only enough to prevent slippage. Belt speed should not exceed 5000 ft. per min.

TABLE 1. V-Belt Sheave Pitch Diameters (MG1-14.42)

Frame Number	Horsepower at Synchronous Speed, RPM				V-Belt Sheave			
					Conventional A, B, C, D AND E		Narrow 3V, 5V, AND 8V	
	3600	1800	1200	900	Minimum Pitch Diameter Inches	*Maximum Width Inches	Minimum Outside Diameter Inches	**Maximum Width Inches
143T	1.5	1	.75	.5	2.2	4.25	2.2	2.25
145T	2-3	1.5-2	1	.75	2.4	4.25	2.4	2.25
182T	3	3	1.5	1	2.4	5.25	2.4	2.75
182T	5	...	...	...	2.6	5.25	2.4	2.75
184T	...	...	2	1.5	2.4	5.25	2.4	2.75
184T	5	...	...	...	2.6	5.25	2.4	2.75
184T	7.5	5	...	...	3.0	5.25	3.0	2.75
213T	7.5-10	7.5	3	2	3.0	6.5	3.0	3.375
215T	10	...	5	3	3.0	6.5	3.0	3.375
215T	15	10	...	...	3.8	6.5	3.8	3.375
254T	15	...	7.5	5	3.8	7.75	3.8	4
254T	20	15	...	...	4.4	7.75	4.4	4
256T	20-25	...	10	7.5	4.4	7.75	4.4	4
256T	...	20	...	...	4.6	7.75	4.4	4
284T	...	...	15	10	4.6	9	4.4	4.625
284T	...	25	...	...	5.0	9	4.4	4.625
286T	...	30	20	15	5.4	9	5.2	4.625

Downloaded from Dealers Industrial Equipment -- Visit https://DealersElectric.com or call (908) 688-1966 for all of your Teco needs

TABLE 1. V-Belt Sheave Pitch Diameters (MG1-14.42)

Frame Number	Horsepower at Synchronous Speed, RPM				V-Belt Sheave			
					Conventional A, B, C, D AND E		Narrow 3V, 5V, AND 8V	
	3600	1800	1200	900	Minimum Pitch Diameter Inches	*Maximum Width Inches	Minimum Outside Diameter Inches	**Maximum Width Inches
324T	...	40	25	20	6.0	10.25	6.0	5.25
326T	...	50	30	25	6.8	10.25	6.8	5.25
364T	...	...	40	30	6.8	11.5	6.8	5
364T	...	60	...	...	7.4	11.5	7.4	5.785
365T	...	...	50	40	8.2	11.5	8.2	5.785
365T	...	75	...	...	9.0	11.5	8.6	5.785
404T	...	...	60	...	9.0	14.25	8.0	7.25
404T	...	...	...	50	9.0	14.25	8.4	7.25
404T	...	100	...	...	10.0	14.25	8.6	7.25
405T	...	...	75	60	10.0	14.25	10.0	7.25
405T	...	100	...	...	10.0	14.25	8.6	7.25
405T	...	125	...	...	11.5	14.25	10.5	7.25
444T	...	...	100	...	11.0	16.75	10.0	8.5
444T	...	...	...	75	10.5	16.75	9.5	8.5
444T	...	125	...	...	11.0	16.75	9.5	8.5
444T	...	150	...	...	...	16.75	10.5	8.5
445T	...	...	125	...	12.5	16.75	12.0	8.5
445T	...	...	...	100	12.5	16.75	12.0	8.5
445T	...	150	...	...	...	16.75	10.5	8.5

*****Max. Sheave width = 2(N-W) - .25

**Max Sheave width = N-W

***Sheave ratios grater than 5:1 and center-to-center distance less than the diameter of the large sheave should be referred to TECO-Westinghouse.

POWER SUPPLY & CONNECTIONS

1. Wiring of motor and control, overload protection and grounding should be in accordance with National Electrical Code and all local safety requirements.
2. Nameplate voltage and frequency should agree with power supply. Motor will operate satisfactorily on line voltage within ±10% of nameplate voltage; or frequency with ±5% and with a combined variation not to exceed ±10%. 230-volt motors can be used on 208-volt network systems, but with slightly modified performance characteristics as shown on the nameplate.
3. Dual voltage and single voltage motors can be connected for the desired voltage by following connection diagram shown on the nameplate or inside of the conduit box.
4. All Explosion Proof motors have Temperature Limiting Devices in the motor enclosure to prevent excessive external surface temperature of the motor in accordance with U/L standards. Terminals of thermal protectors (P1 & P2) should be connected to the motor control equipment, according to the connection diagram inside of the conduit box.
5. Standard connection diagram for three phase, not thermally protected, dual rotation motors are shown in diagrams A through E. **(Note: To change rotation, Interchange any two line leads)**

Downloaded from Dealers Industrial Equipment -- Visit https://DealersElectric.com or call (908) 688-1966 for all of your Teco needs

A. 3 Lead, Single Voltage

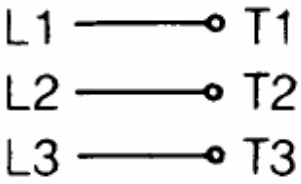

B. 6 Lead, Dual Voltage & Voltage Ration 1 to 3

B-1 Across the Line Start & Run

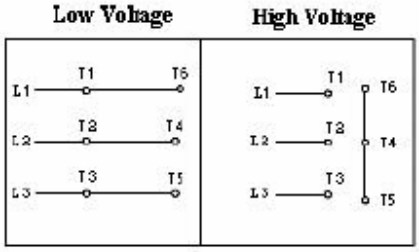

B-2 Wye Start & Delta Run
(Low Voltage only)

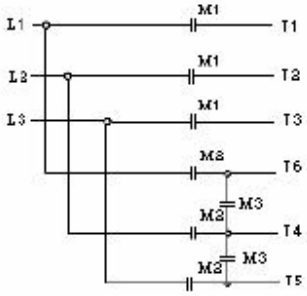

	START	RUN
M1	CLOSE	CLOSE
M2	OPEN	CLOSE
M3	CLOSE	OPEN

C. 9 Leads; Dual Voltage & Voltage Ratio 1 to 2, Wye Connected

C-1 Across the Line Start & Run

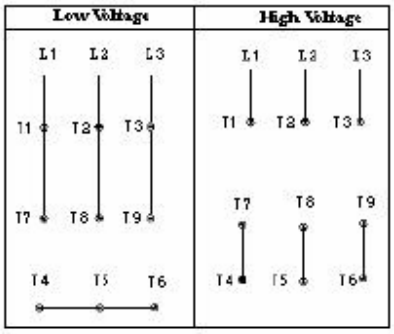

C-2 Part Winding Start
(Low Voltage only)

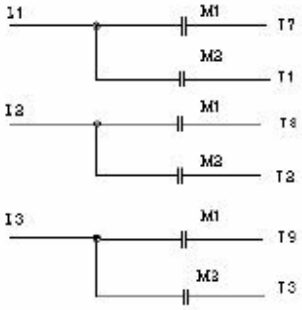

	START	RUN
M1	CLOSE	CLOSE
M2	OPEN	CLOSE
Tie Together	(T4-T5-T6)	

Downloaded from Dealers Industrial Equipment -- Visit https://DealersElectric.com or call (908) 688-1966 for all of your Teco needs

D. 9 Leads; Dual Voltage & Voltage Ration 1 to 2, Delta Connected

D-1 Across the Line Start & Run

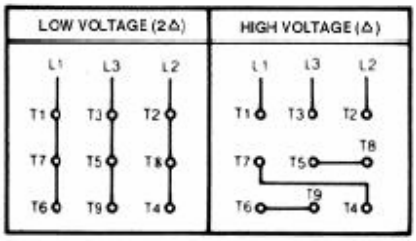

D-2 Part Winding Start
(Low Voltage only)

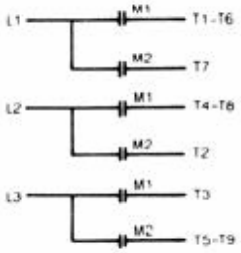

	START	RUN
M1	CLOSE	CLOSE
M2	OPEN	CLOSE

E. 12 Leads, Dual Voltage

E-1 Across the Line Start & Run

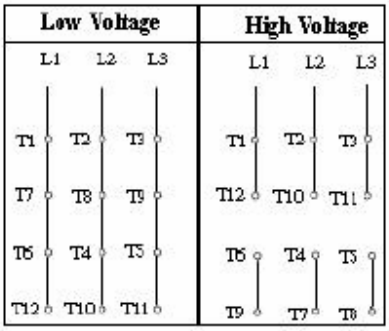

E-2-1 Wye Start & Delta Run (Low Voltage only)

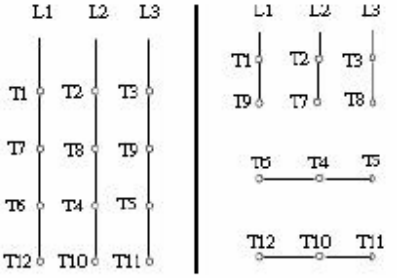

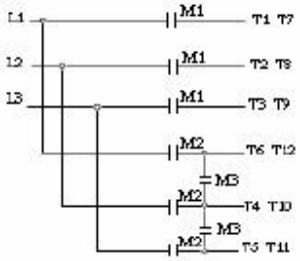

	START	RUN
M1	CLOSE	CLOSE
M2	OPEN	CLOSE
M3	CLOSE	OPEN

E-2-2 Wye Start & Delta Run (High Voltage only)

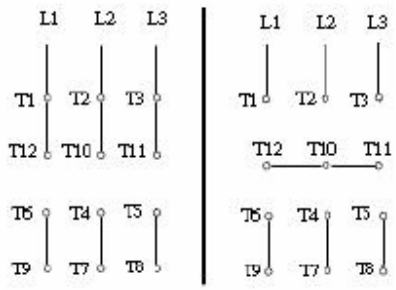

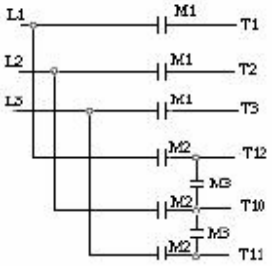

	START	RUN
M1	CLOSE	CLOSE
M2	OPEN	CLOSE
M3	CLOSE	OPEN

Downloaded from Dealers Industrial Equipment -- Visit https://DealersElectric.com or call (908) 688-1966 for all of your Teco needs

E-3 Part Winding Start (Low Voltage only)

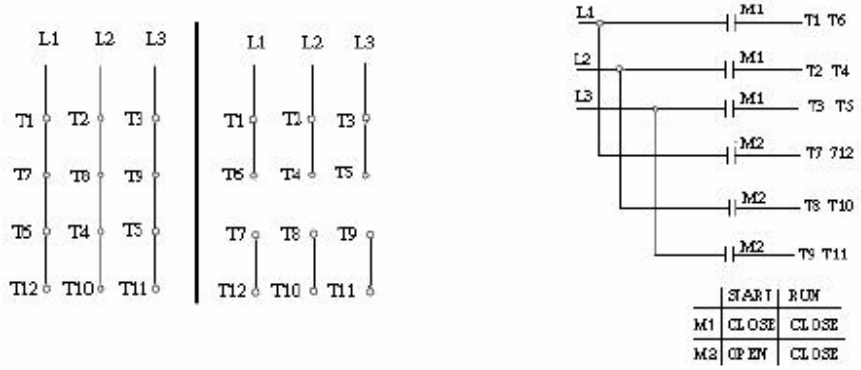

*Important: For Part Winding Start, M2 contactor should be closed within two (2) seconds after M1 contactor is closed.
Only 4 pole and above (e.g., 6P, 8P...) motors are satisfactory for Part Winding Start at low voltage.

START UP

1. Disconnect load and start motor. Check direction of rotation. If rotation must be changed, ALLOW THE MOTOR TO STOP COMPLETLEY. Interchange any two leads of a three-phase motor.
2. Connect load. The motor should start quickly and run smoothly. If no, shut power off at once. Recheck the assembly including all connections before restarting.
3. If excessive vibration is noted, check for loose mounting bolts too flexible motor support structure or transmitted vibration from adjacent machinery. Periodic vibration checks should be made; foundations often settle.
4. Operate under load for short period of time and check operating current against nameplate.

TESTING

If the motor has been in storage for an extensive period or has been subjected to adverse moisture conditions, it is best to check the insulation resistance of the stator winding with a megometer. Depending on the length and conditions of storage it may be necessary to regrease or change rusted bearings.
If the resistance is lower than one megohm the windings should be dried in one of the following two ways:

1. Bake in oven at temperatures not exceeding 194°F until insulation resistance becomes constant.
2. With rotor locked, apply low voltage and gradually increase the current through windings until temperature measured with a thermometer reaches 194°F. Do not exceed this temperature.

Downloaded from Dealers Industrial Equipment -- Visit https://DealersElectric.com or call (908) 688-1966 for all of your Teco needs

MAINTENANCE

INSPECTION

Inspect motor at regular intervals. Keep motor clean and ventilation openings clear.

LUBRICATION

1. Frame 143T-256T: Double shielded and pre-lubricated ball-bearing motors without grease fittings and don't need re-lubrication, except on MAX-E1® and MAX-E2® products which have re-greasable features.
2. Frames 280TS, 320-449TZ(TS): Motors having grease fittings and grease discharge devices at brackets. Motors are shipped with grease for initial running. It is necessary to re-lubricate anti-friction bearing motors periodically, depending on size and type of service. See Table 2 to provide maximum bearing life. Excessive or too frequent lubrication may damage the motor.

TABLE 2

Horsepower	Standard Conditions	Severe Conditions	Extreme Conditions
1 Thru 30 Hp, 1800 rpm and below	7 years	3 years	180 days
40 Thru 75 Hp, 1800 rpm and below	210 days	70 days	30 days
100 Thru 150 Hp, 1800 rpm and below	90 days	30 days	15 days
1 Thru 20 Hp, 3600 rpm	5 years	2 years	90 days
25 Thru 75 Hp, 3600 rpm	180 days	60 days	30 days
100 Thru 150 Hp, 3600 rpm	90 days	30 days	15 days

Note:

A. Standard conditions: 8 hours operation per day, normal or light loading, clear and 40°C ambient conditions.
B. Severe conditions: 24-hour operation per day or light shock loading, vibration or in dirty or dusty conditions.
C. Extreme conditions: With heavy shock loading or vibration or dusty conditions.
D. For double shielded bearings, above data (lubrication frequency) means that the bearing must be replaced.

3. Be sure fittings are clean and free from dirt. Using a low-pressure grease gun, pump in the recommended grease until new grease appears at grease discharge hole.
4. Use the POLYUREA grease unless special grease is specified on the nameplate.
5. If re-lubrication is to be performed with the motor running, stay clear of rotating parts. After re-greasing, allow the motor to run for ten to thirty minutes.

Downloaded from Dealers Industrial Equipment -- Visit https://DealersElectric.com or call (908) 688-1966 for all of your Teco needs

RENEWAL PARTS

1. Use only genuine TECO-Westinghouse renewal parts or as recommended by TECO-Westinghouse Motor Company.
2. When you order renewal parts please specify complete information to TECO-Westinghouse office/agent such as type, frame no., poles, horsepower, voltage, series no., quantity, etc.

FOR FURTHER INFORMATION PLEASE CONTACT

TECO-WESTINGHOUSE MOTOR COMPANY

Round Rock, TX **800-873-8326**

Downloaded from Dealers Industrial Equipment -- Visit https://DealersElectric.com or call (908) 688-1966 for all of your Teco needs