TYPE	OUTPUT		POLE	TIME RATING	VOLTAGE V	Hz	SYN.SPEED R.P.M
	HP.	kW.					
AEEAGD	125	93.3	4	CONT.	190/380	50	1500

TOTALLY ENCLOSED FAN-COOLED TYPE. SQUIRREL-CAGE ROTOR

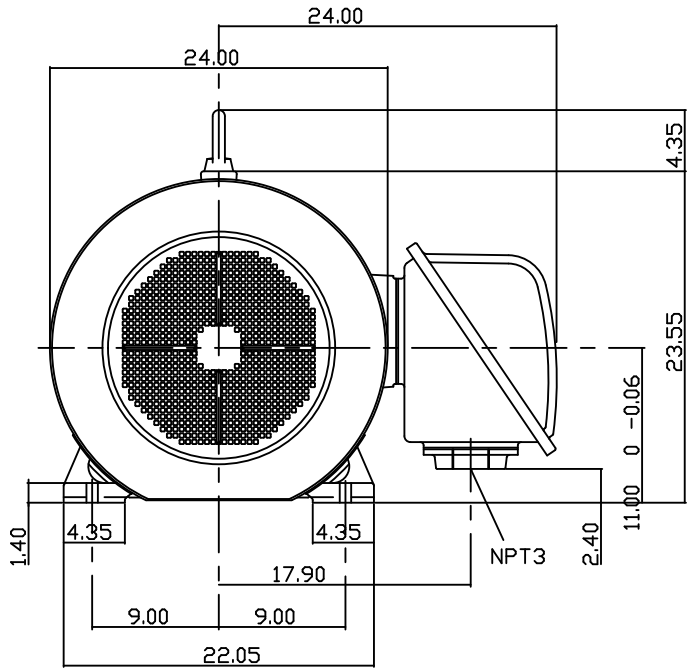

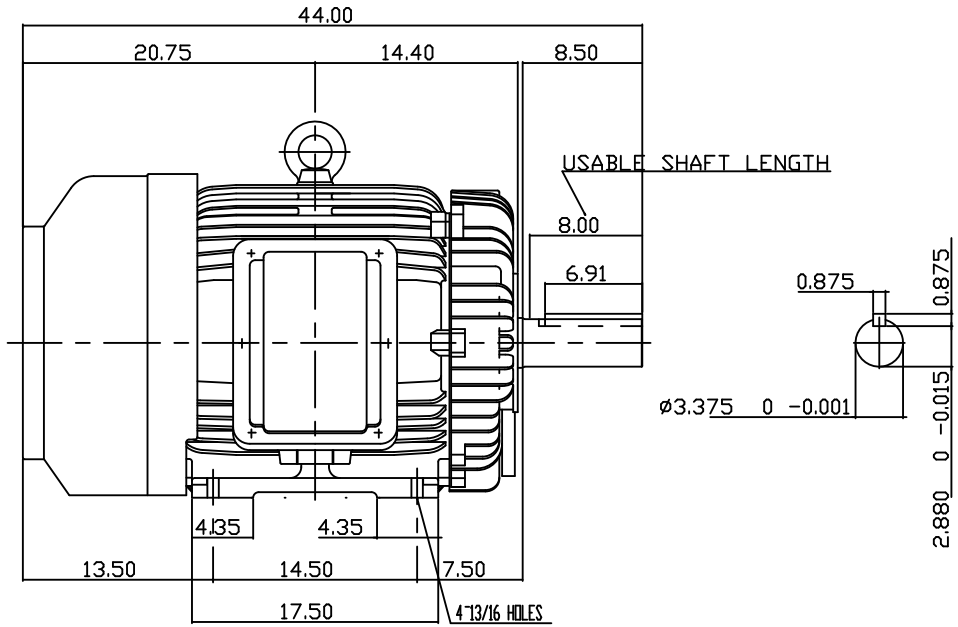

NOTE:

1. DIMENSIONS IN INCH
2. FRAME NO. 444T
3. F CLASS INSULATION, S.F.1.0
4. FOR BELT DRIVE
5. ENCLOSURE: IP54
6. BEARING SIZE DRIVE END: NU318C3
   NON-DRIVE END: 6316
7. APPROX. WEIGHT: 1600 LBS

DWN.	T.H.Pan	JUN 30 2005
CHKD.	H.HUANG	JUN 30 2005
APPD.	C.WANG	JUN 30 2005

DATE 20110905

CAT. # CD1254R-50

OUTLINE DIMENSIONS

3-PHASE INDUCTION MOTOR

TECO Westinghouse

DWG NO. 3B040C061 REV: 00

TW-56C