CATALOG NO. CD0606	OUTLINE DIMENSIONS	MOTOR TYPE: AEEAGD
DATE JULY-20-15	3-PHASE INDUCTION MOTOR	FRAME NO. 404T

Pole	HP	kW	Hz	VOLT	r/min(rpm)
6	60	45	60	230/460	1200

Ins	Rating	Dimension in	Approx Weight	Bearings	
F	CONT.	inches	868 lbs.	DE: 6317	NDE: 6313

Totally Enclosed Fan-Cooled Type. Squirrel-Cage Rotor.

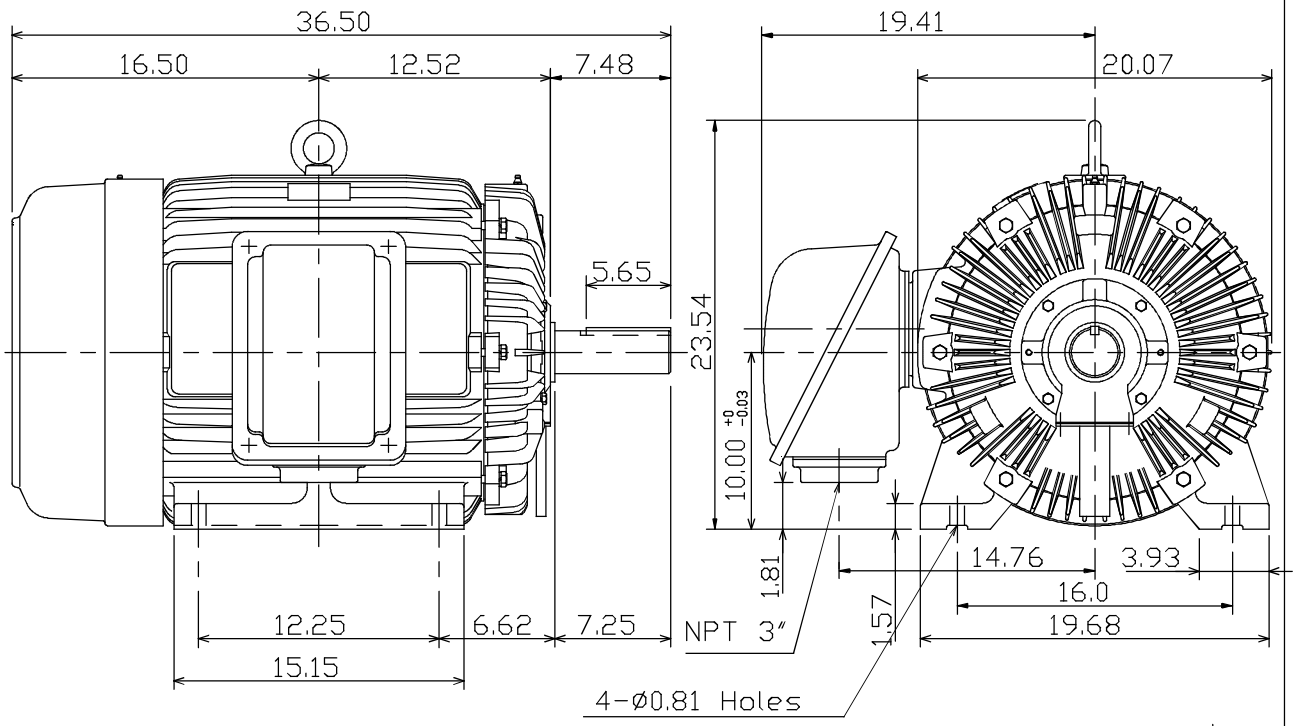

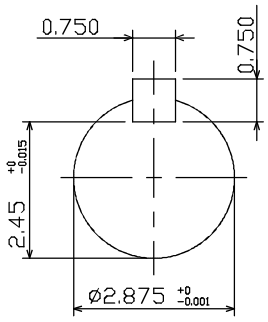

NOTE:
1. ENCLOSURE: IP55
2. SHAFT MATERIAL: SCM440 Q&T (AISI 4140 EQUIV)
3. WITH THERMISTOR: PTC 140°C x 3PCS
   WIRED IN MAIN TERMINAL BOX

TW-56C

0	DWG.	C. RAM	07 20 15

DWG.	J.S.LIN	06 15 13	TECO Westinghouse	DWG NO.
CHKD.	K.L.KUO	06 15 13		31049J361610
APPD.	C.H.SHYU	06 15 13		